How to Build a Cubmobile

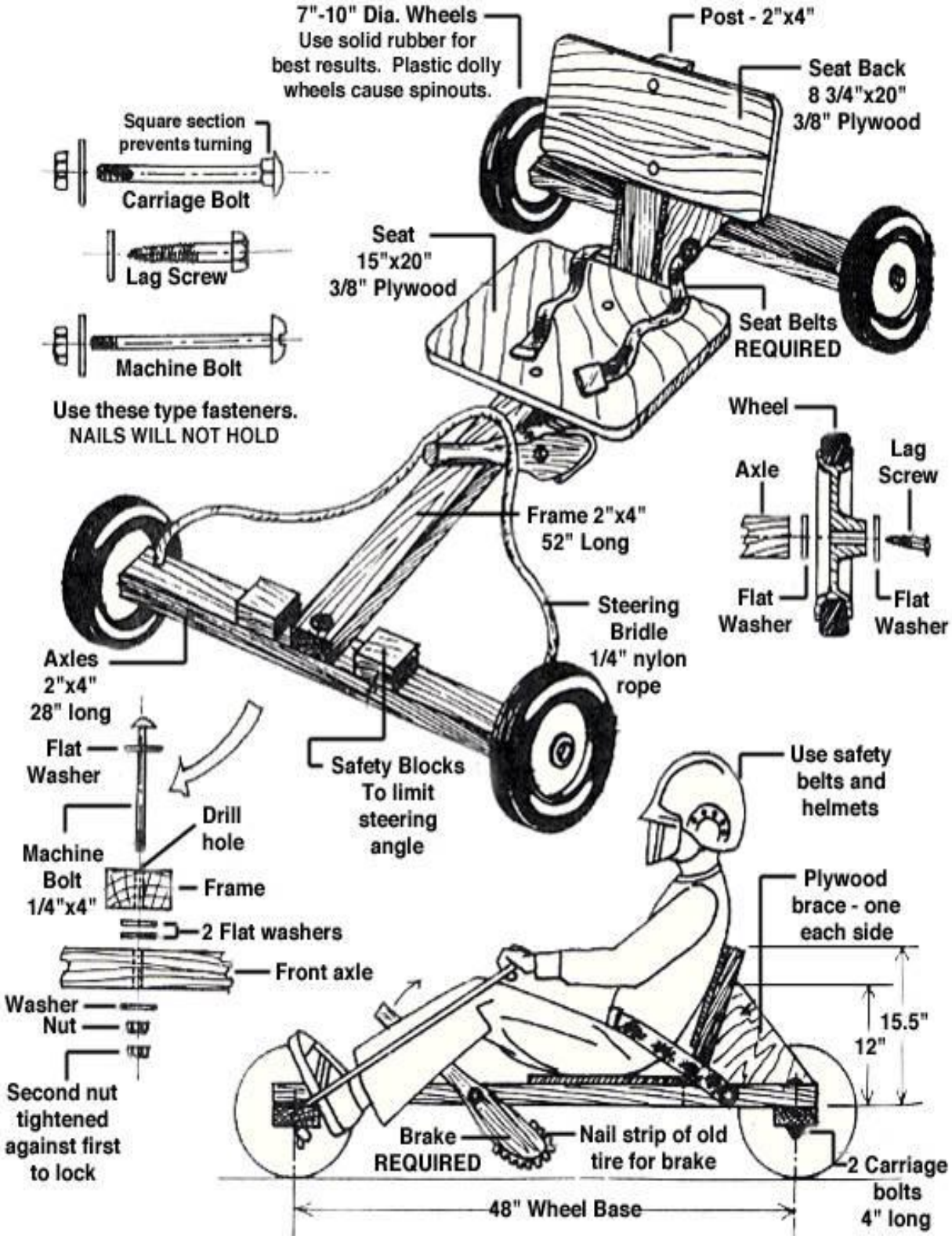

(rev. 08/2008)

How to Build a Cubmobile

Detailed Instructions

1. Cut one 2 X 4 52" for main frame.
2. Cut two 2 X 4's 28" for axles.
3. Make an "X" on each end of each axle, and drill a hole at each "X" intersect, 6" deep using a hand electric drill (5/16" wood bit works well).
4. On front axle 2 X 4:
    a. Drill a 5/16" hole on each end near the back for the rope.
    b. Drill a 3/8" hole at center of 2 X 4.
    c. Attach (2) 2 X 4 blocks to front axle, on either side, 2-1/8" from center hole, Use glue and #6 X 2" screws. This will limit steering.
5. At front of main frame 2 X 4, drill a 3/8" hole (center 1-5/8" from front).
6. Attach front axle to frame using 3/8" X 4" hex bolt, 4 washers, and lock nut or 2 nuts. (Tighten enough to allow steering).
7. Align back axle 2 X 4 at right angle with back of main frame 2 X 4, clamp if possible. Drill (2) 5/16" holes through axle and main frame. Attach main frame to back axle using 2 carriage bolts, 2 washers, 2 lock washers, and 2 nuts. If this is to be a permanent attachment, glue also.
8. Cut out seat and back rest from plywood.
9. Cut one 2 X 4 12-14" in length for back rest support. (Bevel slightly about 5 degrees if possible).
10. Attach back rest support (bevel end down) to main frame using glue and 2 screws (#8...21/2") at an angle. Position of this support depends on size of boy, have scout sit on 2 X 4 frame to estimate position.
11. Cut out 2 triangular shaped pieces of plywood and attach to either side of backrest support and main frame with glue and screws (#6 1-1/2"). Drilling small pilot holes helps.
12. Attach seat and back rest using glue and screws (#6...1-1/2").
13. Cut 2 X 2 surveyor's stake to 14-16" at an angle, cover end with rubber using nails, drill a 3/8" hole through stake at location it will meet main frame.
14. Drill hole 5/16" into main frame at point to attach brake. Mount brake using 3/8" X 4" lag screw and washer to side of main frame.
15. Drill and attach seat belt with fasteners of choice.
16. Attach 6-7' of 1/4" rope to front axle as shown.
17. Attach wheels using washers and 3/8" X 6" lag screws. (Socket wrench helps).

How to Build a Cubmobile

Supplies and Tools:

Qty	Description Tools you will need
4	8" wheels Power drill
1	2'X4' 3/8" or 1/2" plywood 3/8" and 5/16" wood bit
2	8' 2X4's Wrenches or socket set
1	2"X2" surveyor's stake Screwdriver
4	3/8" X 6" lag screws (for wheels) Tape measurer
1	3/8" X 4" hex bolt (for front axle) Wood glue
1	3/8" X 4" lag screw (for brake) Power or hand saw
2	5/16" X 4" carriage bolts (for rear axle)
13	3/8" washers
1	3/8" lock nut
2	5/16" washers
2	5/16" lock washers
2	5/16" nuts
32	#6 X 1 1/2" wood screws
4	#6 X 2" wood screws
1	6-7' 1/4" rope
1	seat belt (from salvage yard)
1	2" X6" piece of rubber (from old tire)

Cubmobile Guidelines:

- Wheels must not exceed 10 inches in diameter.
- All wheels may only be equipped with solid rubber tires.
- Car frame is made from 2-by-4-inch construction lumber.
- The overall length of the car is a maximum of 5 feet; the wheel base a maximum of 4 feet.
- Use roundhead 1/4-inch bolts to hold frame. Screws are a second choice. Nails are not suitable, because they may work lose.
- All cars must have a seat with braced backrest, so the Scout can comfortably steer with his feet.
- Steering is done with the feet, which are placed on the front axle, and by the hands holding a rope fastened to the front axle.
- If threaded axles are used, the nuts must be secured with cotter pins or wire.
- Cars must be equipped with an adequate safety belt securely fastened to the main frame of the car.
- Cars must be equipped with a handbrake with its rubbing surface faced with a rubber material such as a strip of an old tire. This will stop the car when dragged on the ground.
- During a race, the two 2-by-4-inch blocks fastened 1/4 to 1/2 inch from the center board will limit the turning radius. (Very important to test this before the race!)
- No extra weights, etc. may be placed on the Cubmobile.
- For the Scout's safety, they should wear long pants, a long sleeve shirt, and shoes that completely cover the feet, and a bike helmet.