Cubmobile Derby

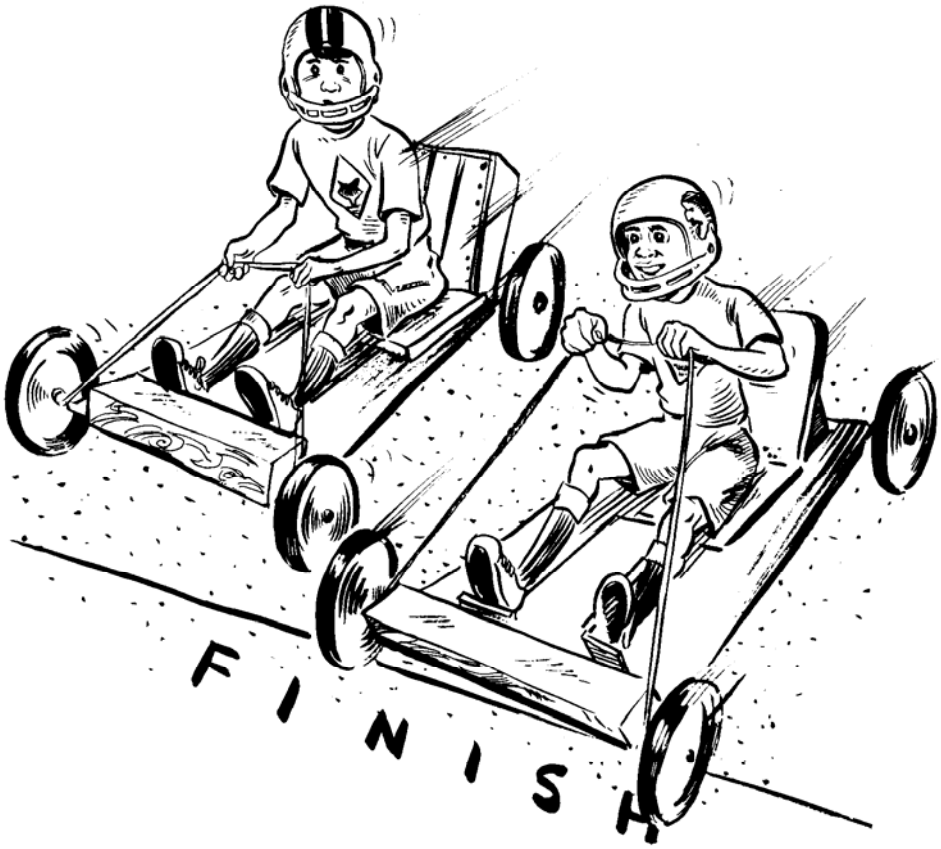

The Cubmobile derby is a colorful, thrilling pack activity that is fun for the whole family.

Planning for the derby should begin several months before the race date, so that Cub Scouts and adults from each den will have time to build a racer. That's right! Each den builds its own Cubmobile, with dads or other adults helping to supervise the construction. There is no engine; the Cubmobile works by gravity.

Follow the guidelines for planning special pack activities. Each pack family should be furnished with an information sheet listing the rules, awards, procedures, building specifications, date, time, and place. This will help prevent any misunderstandings.

PERSONNEL NEEDED

Program Committee

- Plan a snappy opening ceremony, such as a ribbon-cutting.
- Handle all aspects of awards (platform, signs, tables, trophies, ribbons, etc.)
- Plan for crowd control.
- String pennants for decorations.
- Secure public-address system or bullhorns.
- Have rescue squad or first aiders on hand for emergencies.

Inspection Team

- Make a jig of cardboard or wood to check overall dimensions of Cubmobiles.
- Check for correct attachments and safety requirements (especially brake system and seat belt).
- Number each car.
- Act as judges for craftsmanship award. Report winner to program committee.

Registration Team

- Register each boy and give him a number.
- Enter car numbers and names of drivers for each run on tally sheet, to keep track of who drives in each heat.
- Get times from timekeepers at finish line and record.
- Determine final standing of each den car and report results to program committee for presentation of awards.

Track Operations Team

- Assign two gatekeepers to line up cars.
- Have three starters with green flags to operate starting ramp.
- Have official timers with stop watches at finish line (one for each lane).
- Have two judges with checkered flags.
- Mark lanes in street with chalk. Rope off racing area where necessary.
- Provide bales of hay for end of track to make sure Cubmobiles stop.
- Report official times to registration team.

THE TRACK

The track should be a smooth-surfaced street with a gradual slope that is neither too long nor too steep. The suggested track length is about 150 feet, plus additional stopping space. Secure approval from the appropriate city, county, or park authority to close off the street to traffic during the derby.

The lanes should be marked with chalk. Crossing over from one lane to another will happen, especially with inexperienced drivers, but boys should be instructed to stay within their own lanes. Judges should observe the race for any fouls. If a driver is fouled, he should be given another run.

Usually a ramp is set up to start the cars. Cubmobiles start from a standstill, running down the ramp and the slope to the finish line. No pushing or pumping with the feet is allowed.

THE RAMP

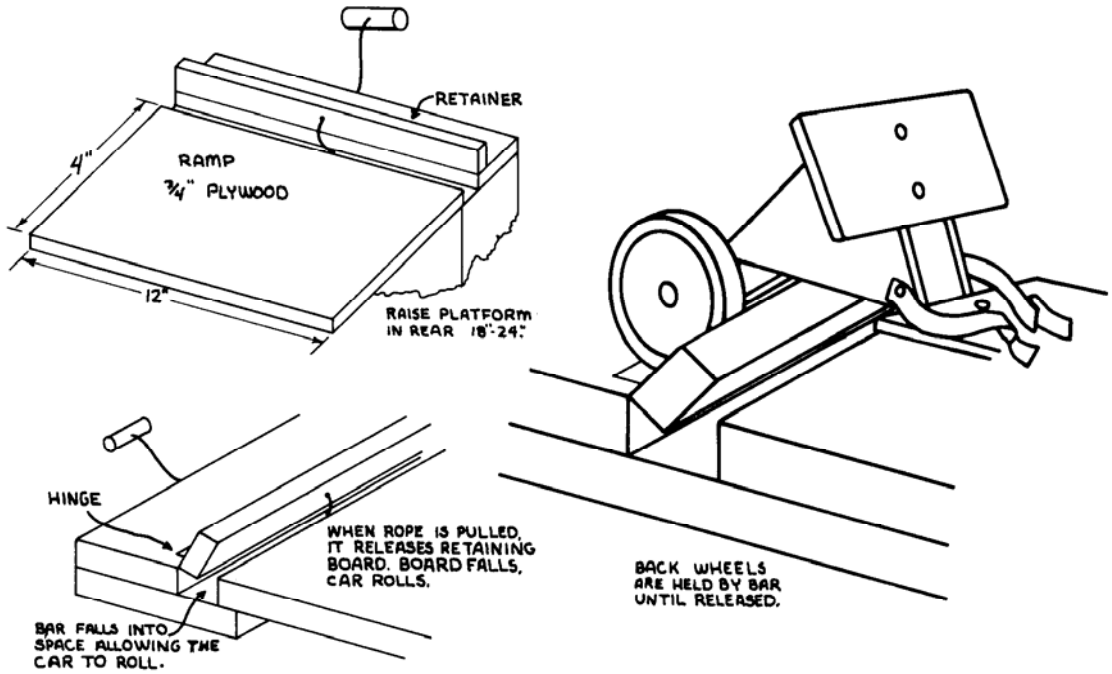

This may be as simple or elaborate as the derby committee wishes. Sheets of heavy plywood are effective and usually can be rented. These can be elevated at the back side with cement blocks. Another type of starting ramp is illustrated here. Consider safety factors when determining the angle of the starting ramp. The ramp should allow ample room for the number of cars starting at one time.

CUBMOBILE SPECS AND PARTS

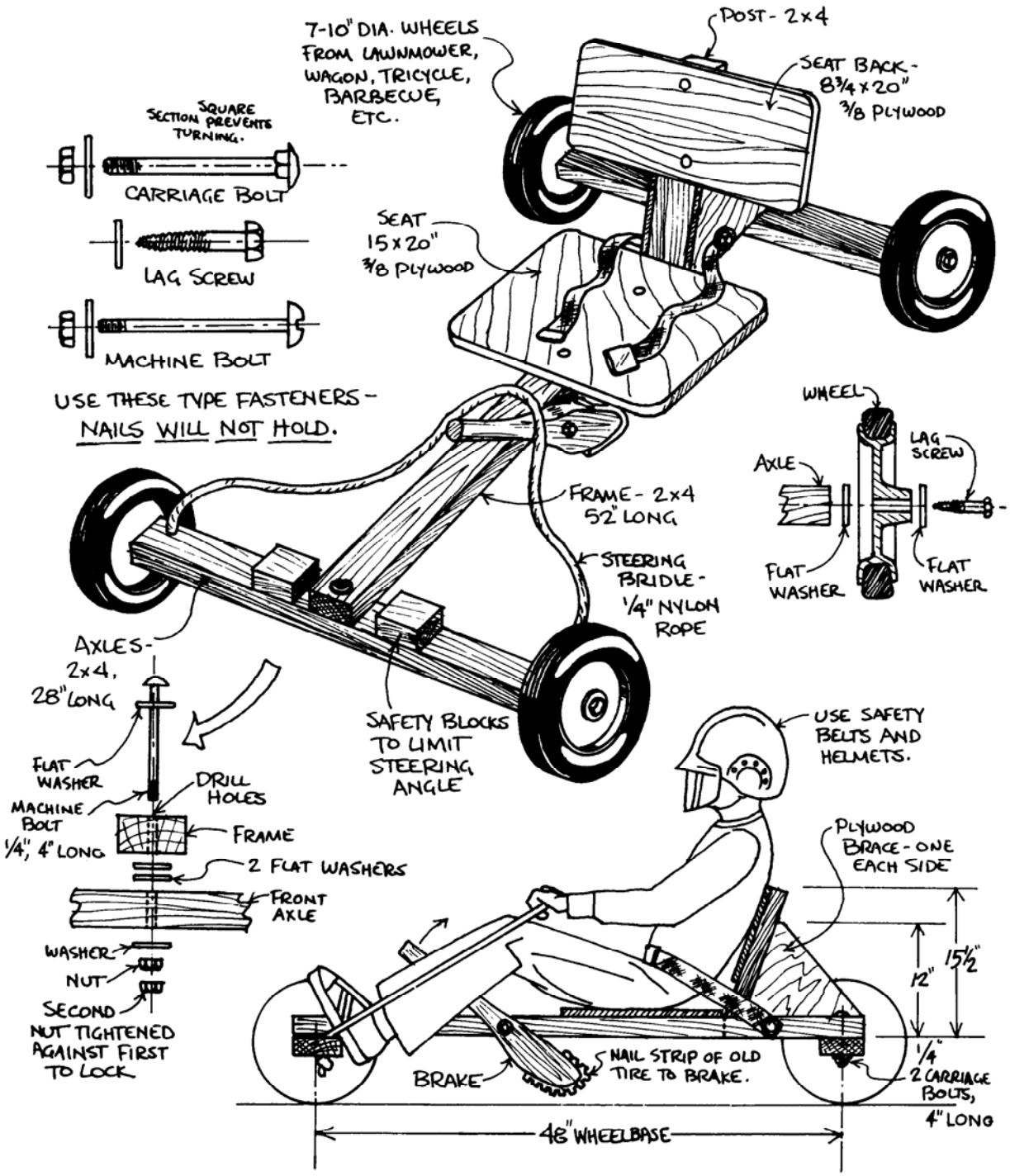

See the illustration for description of building materials and hardware.

- Wheels must not exceed 12 inches in diameter.
- All wheels must be equipped with solid rubber tires.
- Car frame is made from 2×4-inch construction lumber.
- The overall length of the car is a maximum of 5 feet; the wheelbase a maximum of 4 feet. The outside circumference of the wheel may vary from 30 to 36 inches.
- Use roundhead ¼-inch bolts to hold frame. Screws are a second choice. Nails are not suitable, because they may work loose.

- All cars must have a seat with braced backrest, so the boy can comfortably steer with his feet.
- Steering is done with the feet, which are placed on the front axle, and by the hands holding a rope fastened to the front axle.
- If threaded axles are used, the nuts must be secured with cotter pins or wire.
- Cars must be equipped with an adequate safety belt securely fastened to the main frame of the car.
- Cars must be equipped with a handbrake with its rubbing surface faced with a rubber material such as a strip of an old tire. This will stop the car when dragged on the ground.
- During a race, the two 2×4-inch blocks fastened ½-inch from the centerboard will limit the turning radius.

RACING PROCEDURE

1. The derby is run in heats. Each den has one Cubmobile, and each boy in the den races the car one time. The den with the lowest average racing time wins.
2. Cub Scouts bring Cubmobile to inspection station where it is checked and numbered.
3. Cars and drivers go to the registration table where the names and car are checked on the heat schedule.
4. As his name is called by announcer, each boy reports to starting gate and is helped into his car. Seat belt is fastened.
5. All drivers must wear protective head gear, such as football helmet, racing helmet, or construction "hard hat."
6. When cars are released by starter, drivers should stay in their own lanes.
7. No pumping or pushing with the feet is permitted.
8. After driving, the boy returns to the spectator section.

PRIZES

Each boy should receive an award or other memento of his participation in the derby. Winners could be presented with medals or trophies. Multipurpose award ribbons, trophies, and numerous Cub Scout gift items are available at your local Scouting distributor.

See "Prizes and Awards" section of *Cub Scout Leader How-To Book* for additional ideas for prizes.

PUBLICITY

The Cubmobile derby will have considerable appeal to the general public. Invite photographers to take pictures for the local newspaper. See that boys are properly uniformed–they could wear T-shirts and shorts.